Wall mount hand shower

P4104XX



Specifications

Descriptions

- 1-jet hand shower
- 150 cm (59") double interlock flexible hose, swivel and integrated vaccum breaker
- Adjustable
- Scale-free

Available colors

- C : Chrome

Flows

- 9.5 L/min, 2.5 gpm (US) 60psi (P4104XX)
- 5.69 L/min, 1.5 gpm (US) 60psi (P4104XX-15)

Certifications

- CMR248 Approval
- ASME A112.18.1
- CSA B125.1

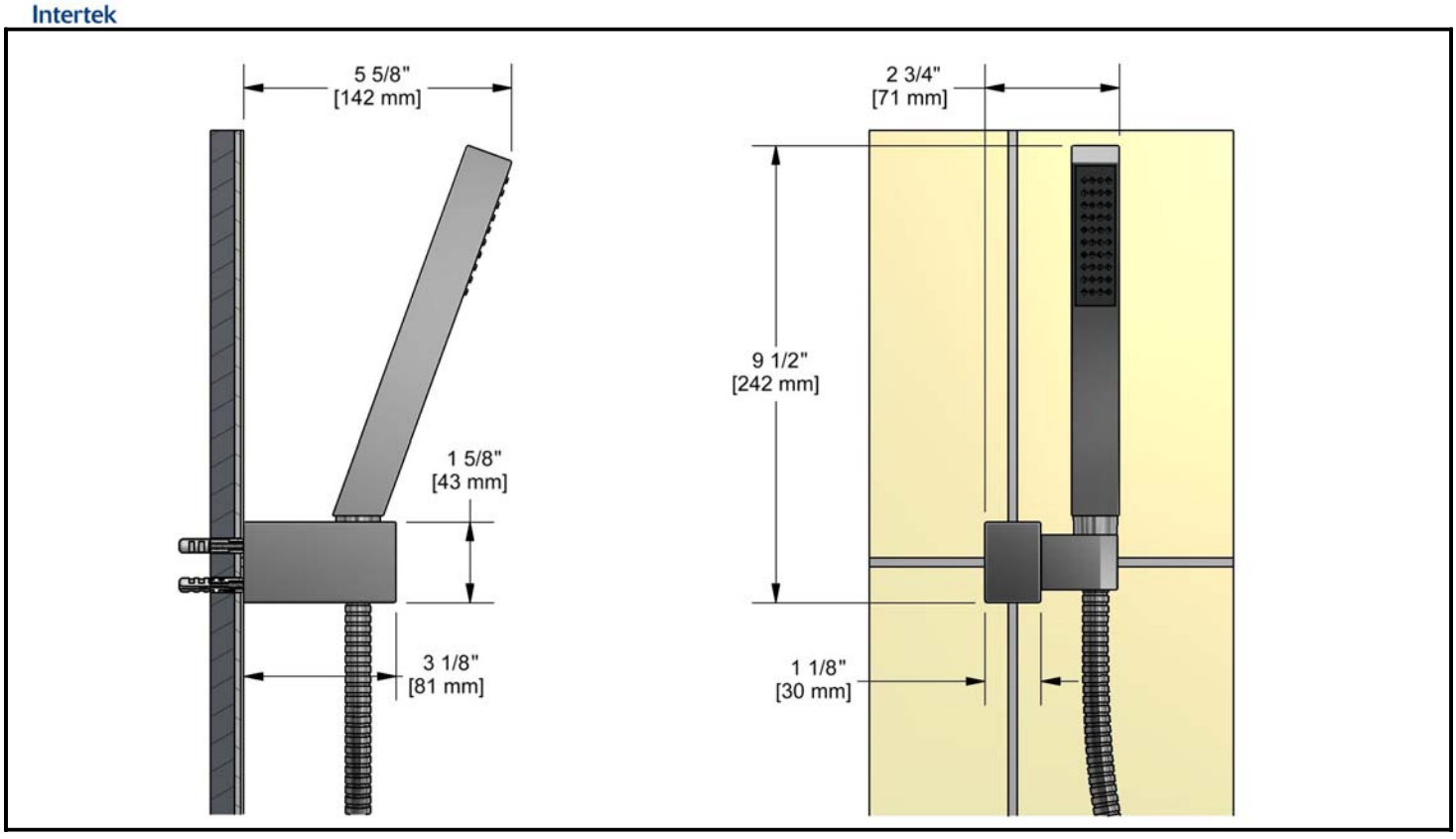

Sizes, models and finishes may differ from thoses presented.

Warranty

RIOBEL PRO products carry a LIFETIME warranty on their cartridges. All other working parts and finishes are guaranteed against manufacturing defects for a period of five (5) years following the date of purchase.

Customer service

Ontario, West Canada : 888-287-5354 Quebec, Maritimes, United States : 866-473-8442